PLANETARY RING GEAR

COMPONENTS

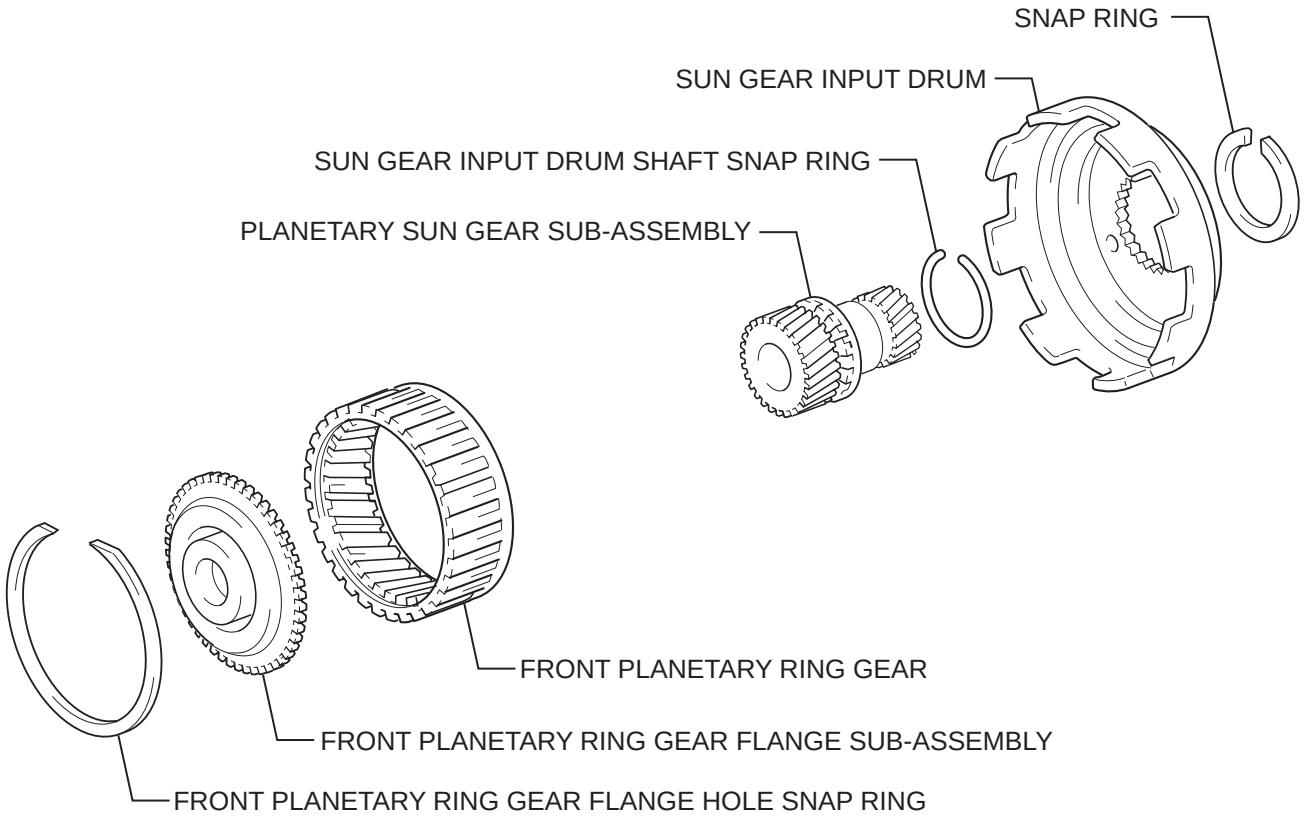

P

C119521E02

cadiagn.com

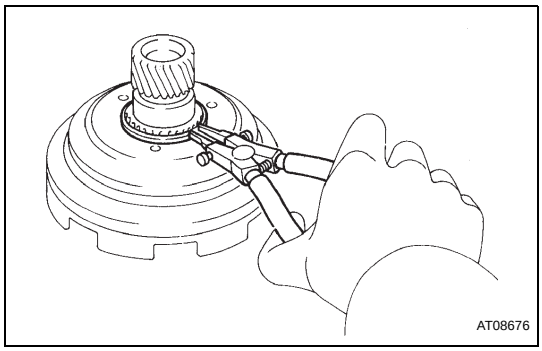

DISASSEMBLY

1. REMOVE PLANETARY SUN GEAR SUB-ASSEMBLY

(a) Using snap ring pliers, remove the snap ring from the planetary sun gear sub-assembly.

(b) Remove the planetary sun gear sub-assembly from the sun gear input drum.

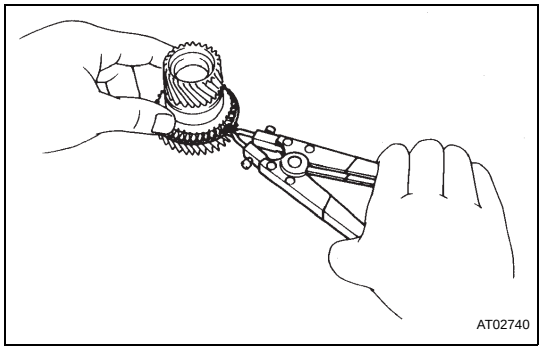

2. REMOVE SUN GEAR INPUT DRUM SHAFT SNAP RING

(a) Using snap ring pliers, remove the sun gear input drum shaft snap ring from the planetary sun gear sub-assembly.

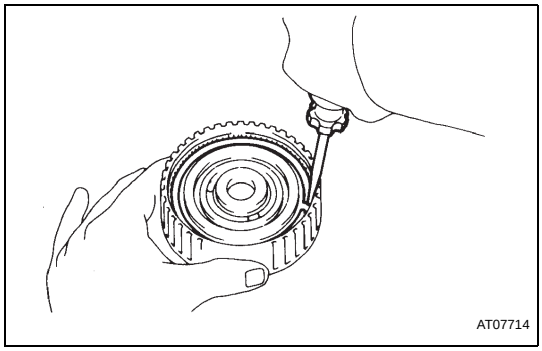

3. REMOVE FRONT PLANETARY RING GEAR FLANGE HOLE SNAP RING

(a) Using a screwdriver, remove the front planetary ring gear flange hole snap ring from the front planetary ring gear.

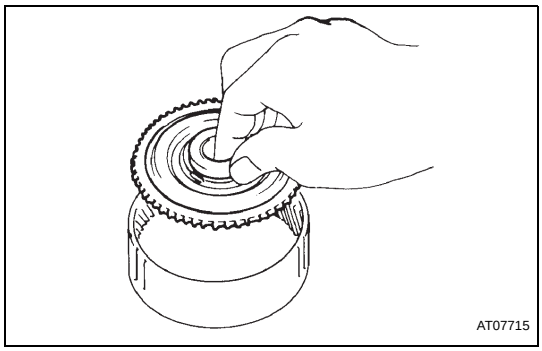

4. REMOVE FRONT PLANETARY RING GEAR FLANGE SUB-ASSEMBLY

(a) Remove the front planetary ring gear flange sub-assembly from the front planetary ring gear.

5. INSPECT PLANETARY SUN GEAR SUB-ASSEMBLY (See page AX-208)

6. INSPECT FRONT PLANETARY RING GEAR FLANGE SUB-ASSEMBLY (See page AX-209)

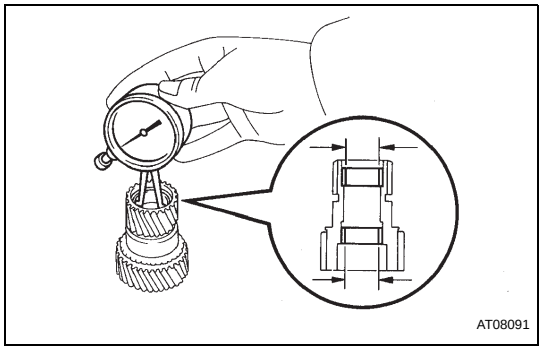

INSPECTION

1. INSPECT PLANETARY SUN GEAR SUB-ASSEMBLY

(a) Using a dial indicator, measure the inside diameter of the planetary sun gear sub-assembly.

Standard inside diameter:
22.025 to 22.046 mm (0.86712 to 0.86795 in.)

Maximum diameter:
22.096 mm (0.86992 in.)

AX

cardiagn.com

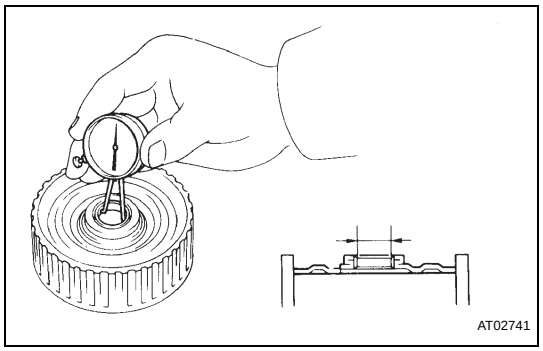

2. INSPECT FRONT PLANETARY RING GEAR FLANGE SUB-ASSEMBLY

(a) Using a dial indicator, measure the inside diameter of the front planetary ring gear flange sub-assembly bushing.

Standard inside diameter:
19.025 to 19.050 mm (0.74901 to 0.75000 in.)

HINT:
If the inside diameter is greater than maximum, replace the front planetary ring gear flange sub-assembly.

REASSEMBLY

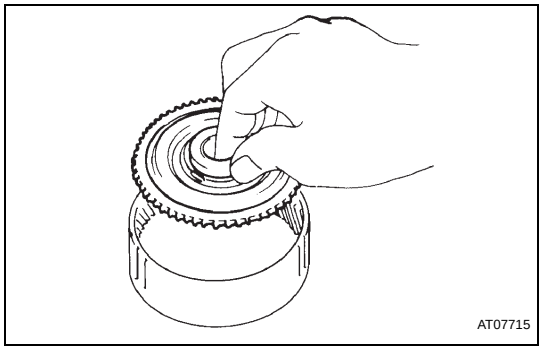

1. INSTALL FRONT PLANETARY RING GEAR FLANGE SUB-ASSEMBLY

(a) Position the front planetary ring gear flange sub-assembly on to the front planetary ring gear.

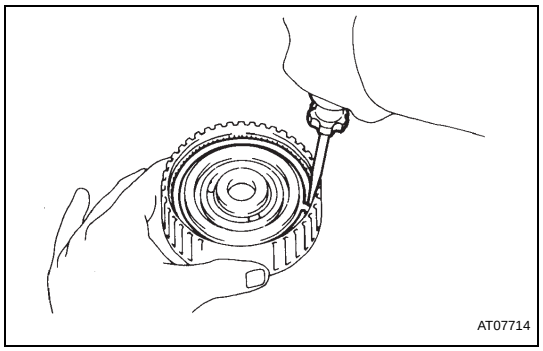

2. INSTALL FRONT PLANETARY RING GEAR FLANGE HOLE SNAP RING

(a) Using a screwdriver, install the front planetary ring gear flange hole snap ring to the front planetary ring gear.

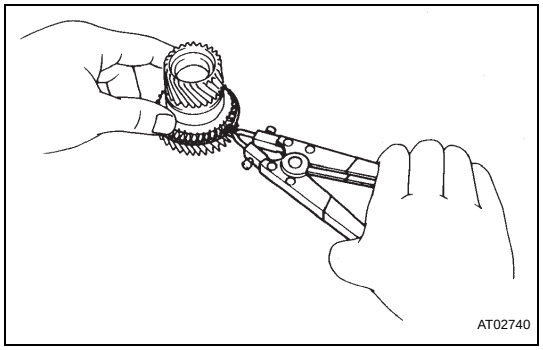

3. INSTALL SUN GEAR INPUT DRUM SHAFT SNAP RING

(a) Using snap ring pliers, install the sun gear input drum shaft snap ring to the planetary sun gear sub-assembly.

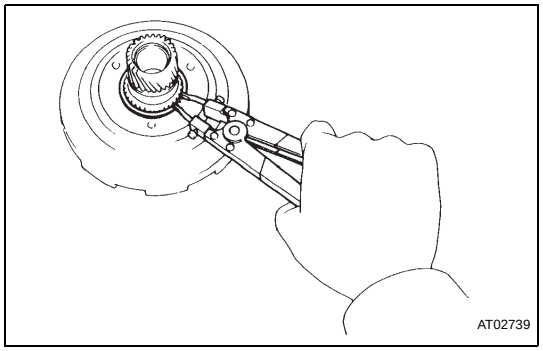

4. INSTALL PLANETARY SUN GEAR SUB-ASSEMBLY

(a) Install the planetary sun gear sub-assembly to the sun gear input drum.

(b) Using snap ring pliers, install the snap ring to the planetary sun gear sub-assembly.

cardiagn.com